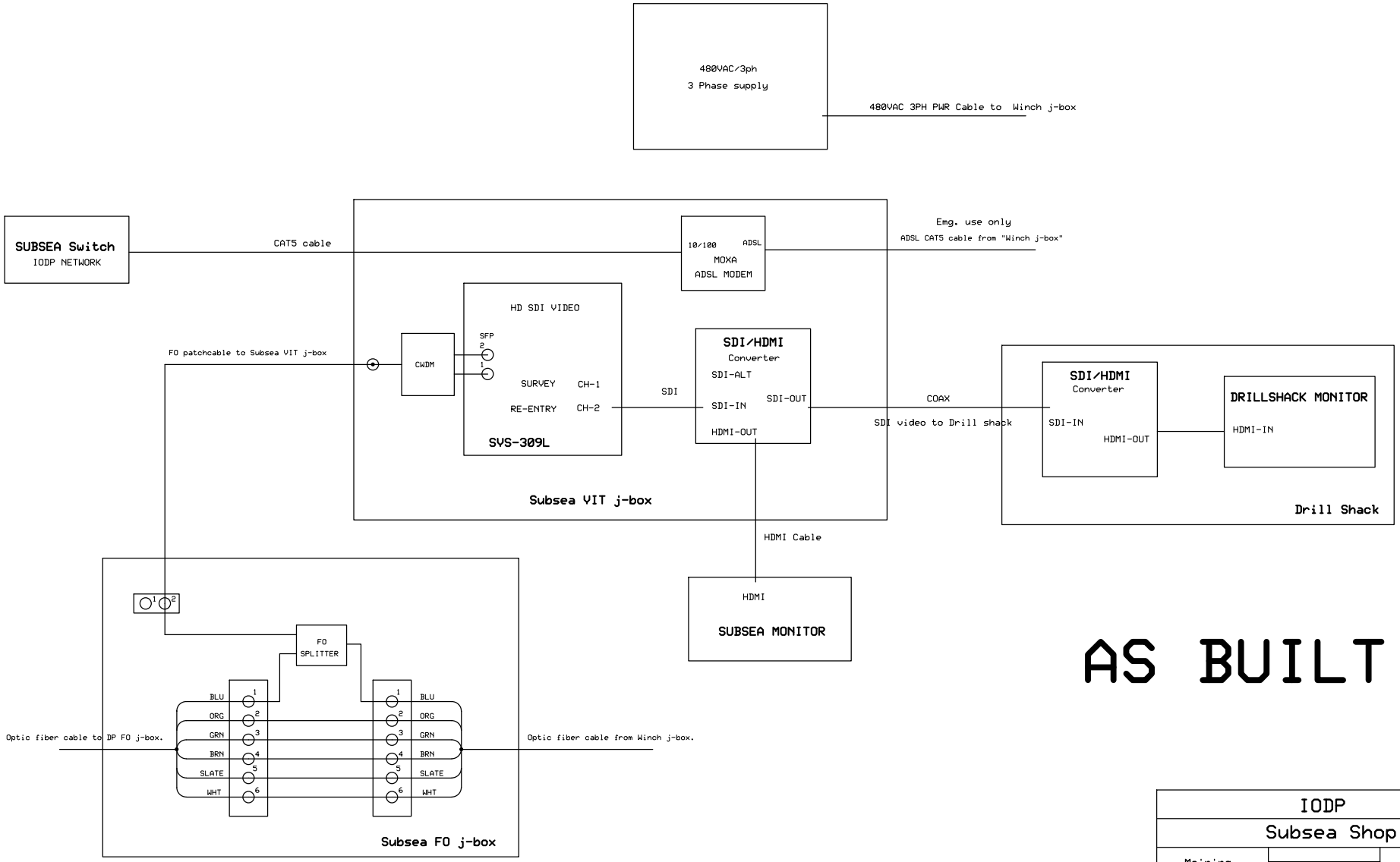

AS BUILT

IODP		
Subsea Shop		
Meiring	032020	Page 12