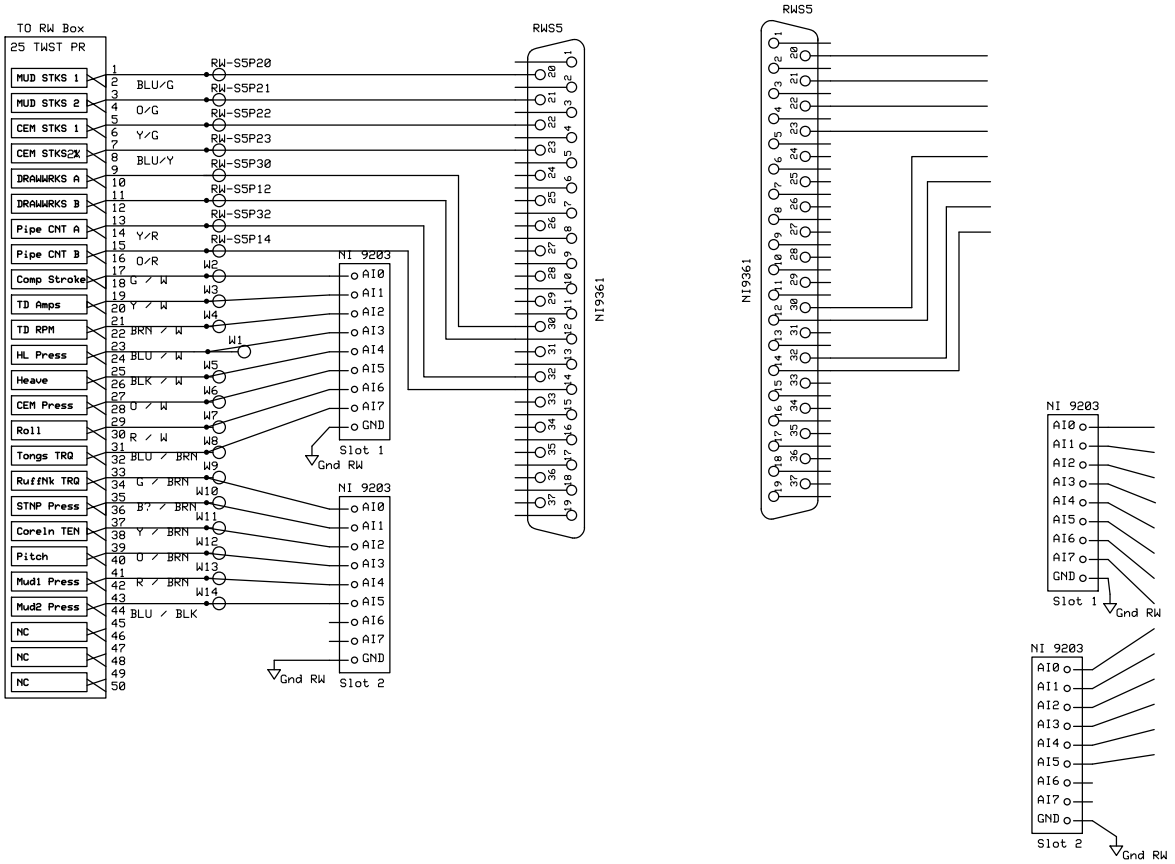

Company Name		
Schematic Name		
Designer's name	Rev 1.0 11/17/2021	Page # or name