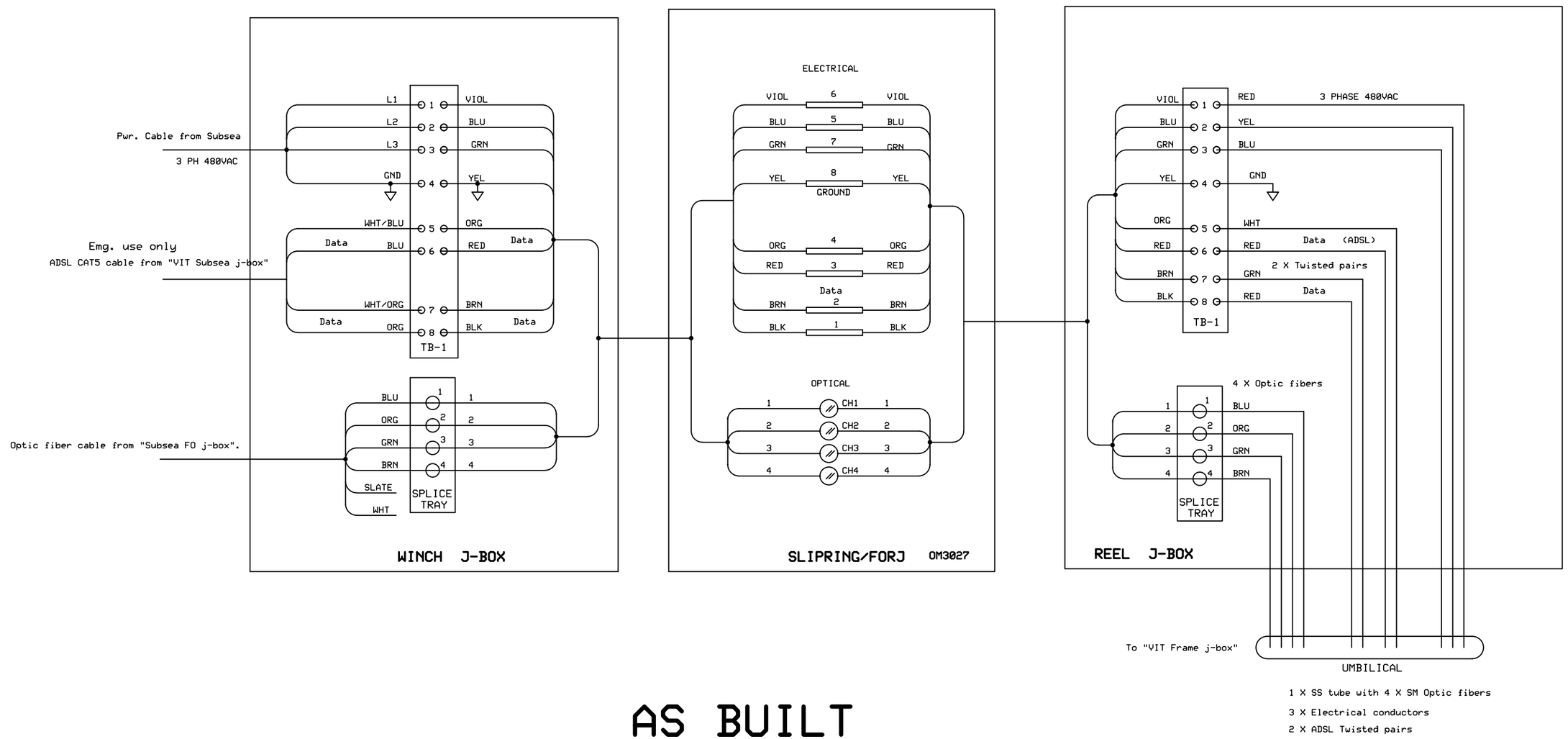

AS BUILT

IODP		
WINCH SCHEMATIC		
MEIRING	032020	Page 8